Owners Manual

MS 275
MPS 2240

POWERFLOW DISTRIBUTION SYSTEMS, ALTERNATORS, BATTERIES & ACCESSORIES FOR THE PROFESSIONAL CAR AUDIO ELECTRONICS, CABLES

Powered Sold by
a Proud Member of
IASCA

GOLD

TABLE 0F CONTENTS

MS-275/MPS-2240

POWER AMPLIFIERS

PHOENIX GOLD

PHOENIX FACTS

Stuff You Should Know

Heat Kills
All amplifiers can get hot. If an amplifier is "loaded down" from an impedance standpoint and makes a lot of power, then it needs to dissipate that energy as heat. Heat will kill an amplifier. If you keep your amplifier cool, it will perform better - with NO annoying shut down problems. If you are going play your amplifier hard consider attaching a fan shroud. It will make a big difference.

Double Power at Half the Impedance
Phoenix amplifiers will "work" into virtually any impedance load known to man. Our amplifiers are physically the largest in their respective power class. PG amplifiers will double output power as impedance is halved. This is usually considered a good thing. But the bad part is that as big as our amplifiers are, they are not big enough for 3 to 6 times their rated power! They WON'T blow-up, but they will thermally shut down. This is not a design flaw. It called "The Laws of Physics". No magic over here! Just plain Ole' Fashioned good engineering. Heatsink material is the single most expensive part in any automotive amplifier today. And our amps aren't BIG enough already?

Voltage Drops Vs Amplifier Construction
Another reason an amplifier would get hot is because of voltage drops. Specifically at the power input terminal. This is very important! That's why we ask that you use 7 gauge wire on MS-275/MPS-2240, and 2 gauge on MS-2125/MPS-2500. If there is any impedance in the power wire or ground wire there will be a power drop which means that if voltage drops current rises (again Ohms law; aka Physics). Again, if there is heavy current draw - excessive heat is soon to follow and create performance problems.

Free Technical Papers
Follow the "Laws Of Physics" and your audio system will "Sing". If you don't follow the laws - your system and vehicle will suffer the consequences. If you would like detailed information, Phoenix Gold offers free technical papers on alternators, amplifiers and crossover filters. Give us a call at (503) 288-2008 to order a technical paper.

BEFORE YOU BEGIN YOUR INSTALLATION

Thank you for choosing a PHOENIX GOLD product. In doing so you've shown a great desire to own the finest in audio repro-duction. PHOENIX GOLD strives to provide you, the customer, with the finest products possible.

Properly installed, your PHOENIX GOLD amplifier will provide years of high quality sonic reproduction. Before installing the MS-275/MPS-2240 in your vehicle, please READ the entire manual carefully. It is required reading for the protection of your vehicle AND for the maximum performance of your car audio system.

The MS-275/MPS-2240 utilize the fastest output devices in the industry. Where most manufacturers use 3 to 5 MHz output devices, PHOENIX GOLD utilizes 25 MHz devices. These devices are not only faster, but much more costly...and much more reliable. At PHOENIX GOLD we don't just use run-of-the-mill capacitors in our circuitry, we use what are called low ESL/ESR type capacitors extensively in our amplifier. This helps reduce one of the major failure modes of all car audio amplifiers - HEAT. The MS-275/MPS-2240 amplifier has been extensively tested and burned-in for maximum reliability. If you, the customer, install this amplifier we provide a "limited" warranty for 30 days. If your authorized PHOENIX GOLD retailer installs your MS-275/MPS-2240 power amplifier the warranty period extends to 18 months. A correctly installed amplifier with a FAN SHROUD will more than likely last the lifetime of the vehicle.

Remember, at PHOENIX GOLD, we don't just manufacture mobile electronics. We also manufacture and sell cables, "PowerFlow" distribution systems, alternators, batteries and accessories for the PROFESSIONAL.

MS-275/MPS-2240 AMPLIFIER FEATURES

- **MS-275** - 2 X 75 watts per channel
  MPS-2240 - 2 X 24 watts per channel
- Bridgeable Output
- TRI-LINEAR™ output configuration allows simultaneous stereo and bridged mono operation.
- Adjustable Bass EQ 0 to +12dB at 45 Hz
- Pulse Width Modulated (PWM) MOS-FET Switching Power Supply
- RIBBON-WINDING™ of Power Toroid
- **MS-275** - Stable into 2 ohm loads
  MPS-2240 - Stable into 1 ohm loads
- High-Current / High-Voltage Triple-Darlington Output Design
- 2-layer 20 mil thick GOLD-PLATED G10 Glass-Epoxy Printed Circuit Board
- Variable input sensitivity 200mV to 2V
- Fully muted turn-on / turn-off circuitry
- Optically isolated input design
- Master / Slave "sync" connection
- Low RFI / EMI design
- VI limiting circuitry with overcurrent LED
- Extensive burn-in and QC testing for the ultimate in reliability
- MADE IN THE GOOD OL' USA

MS-275/MPS-2240 AMPLIFIER SPECIFICATIONS

- Continuous Output Power per Channel
  Both Channel Driven:

  MS-275: Into 4 ohms @ 12V DC ..... 75 WRMS
  Into 2 ohms @ 12V DC- ..... 125 WRMS
  Bridged Into 4 ohms @ 12V DC ..... 180 WRMS

  MPS-2240: Into 4 ohms @ 12V DC ..... 24 WRMS
  Into 2 ohms @ 12V DC ..... 48 WRMS
  Bridged Into 1 ohm @ 12V DC ..... 288 WRMS

- THD at rated power into 4 ohms 0.01%
- SMPTE at rated power into 4 ohms 0.05%
- DIM at rated power into 4 ohms 0.007%
- Frequency response ..... 15Hz to 20KHz +/-1dB
- Signal to Noise Ratio ..... > 100dB (20 to 20kHz)
- Input Sensitivity ..... 200mV to 2V
- Load Impedance ..... 2 to 16 ohms
- Input Impedance ..... 10K ohms
- Idle Current ..... 1 Amp
- Current Consumption - *Full Power Hard Clip*

  MS-275: @ 4 ohms stereo ..... 17 amps
  @ 2 ohms stereo ..... 32 amps
  @ 2 ohms stereo, 4 ohms mono ..... 35 amps

  MPS-2240: @ 4 ohms stereo ..... 8 amps
  @ 2 ohms stereo ..... 16 amps
  @ 1 ohm stereo, 2 ohms mono ..... 30 amps

- Efficiency ..... > 80% (Power Supply)
- Damping Factor @ (20 to 10Khz) ..... 1000 to 1
- Min to Max Voltage requirements ..... 10.2 to 15.5V DC
- Dimensions ..... 8.5" L X 11.4" W X 2.4" H

END PANEL: MS-275/MPS-2240 POWER AMPLIFIER

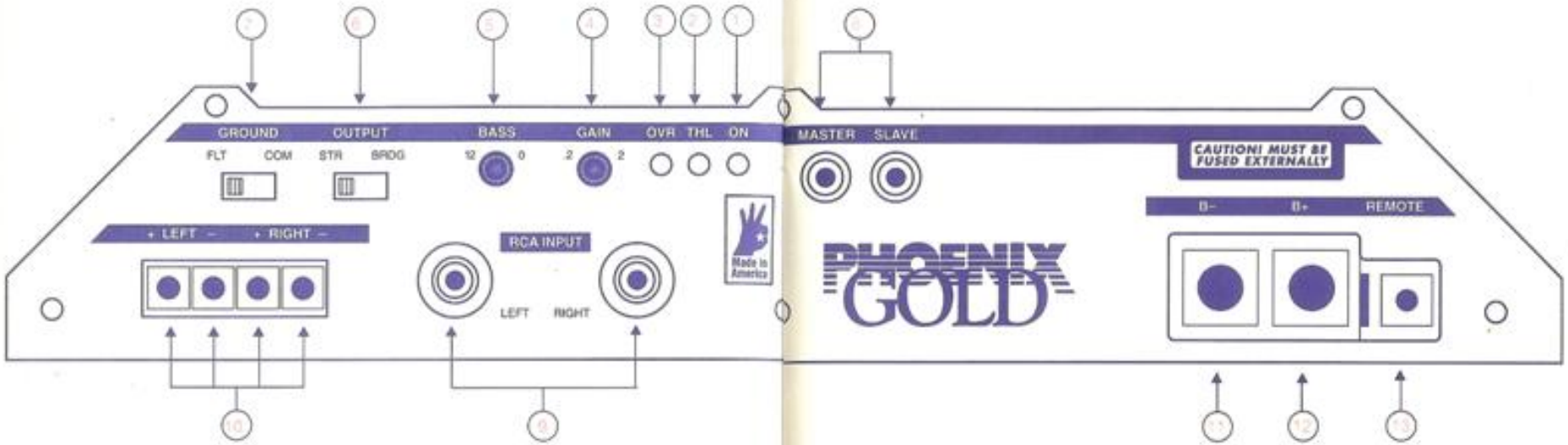

1. ON - POWER ON LED
   Indicates 12 volts at B+, B- and remote terminals. Amplifier is "ON".
2. THL - THERMAL PROTECTION LED
   Indicates the amplifier has "shut-off" as the temperature of the heatsink has reached 90° C or 200° F. In simple terms, the amplifier is EXTREMELY HOT and has turned off to protect itself.
3. OVR - OVERLOAD LED
   Indicates that the amplifier has either:
   A. Passed more than 25 amps of current in the output stage, or...
   B. Passed more than 350 total watts RMS! Obviously a bit more than rated power. This is another part of the amplifier's protection system.
4. GAIN ADJUSTMENT
   Allows for the correct matching of any signal source (CD player, AM/FM cassette deck, etc.) from its pre-amp output into the MS-275/MPS-2240. Adjustments range from 200 mV (.2 volts) to 2 Volts to drive the amplifier to full output power.

5. BASS ADJUSTMENT
   This bass equalizer circuit allows for matching of the sub-woofer/enclosure in any vehicle. It has very narrow bass boost (Q of 6) that is continuously variable from 0 to +12 dB at 45Hz.
6. OUTPUT (STR/BRDG) SWITCH
   Position of the switch indicates that the MS-275/MPS-2240 is in the stereo (STR) or bridged (BRDG) mode. In the bridged mode, ONLY the left input jack operates. If you desire to operate the amplifier in the "TriLinear™" mode, leave the switch in the stereo (STR) position.
7. GROUND (FLT/COM) SWITCH
   Use this switch to get the lowest "potential ground" and thereby the lowest alternator noise. This switch should normally be in the common (COM) position. The floating (FLT) position isolates the input signal ground from chassis ground.

CONTROLS & FUNCTIONS CONTINUED

8. MASTER / SLAVE

These receptacles are ONLY used when two or more PHOENIX GOLD amplifier's are utilized in the same system. In multiple amplifier systems, ONE becomes the "Master" while the other(s) become the "Slave(s)." This configuration totally eliminates what is called "Heterodyne" noise in a car audio system as the PWM power supplies are locked "IN-SYNC" (frequency wise) with each other. See page 22.

9. RCA INPUTS

The MS-275/MPS-2240 is set-up for Pre-amp inputs. The amplifier should be compatible with all CD players and AM/FM cassette decks with RCA outputs.

10. SPEAKER OUTPUT(S)

This specially tooled connector is designed to accommodate up to 10 gauge speaker cable. Connect speaker leads to this terminal. Be sure to connect the +/- correctly!

11. B- GROUND INPUT TERMINAL (NEGATIVE 12 VOLTS DC)

This specially tooled connector is designed to accommodate up to 7 gauge ground cable. Connect directly to the negative battery terminal.

12. B+ POWER INPUT TERMINAL (POSITIVE 12 VOLTS DC)

This specially tooled connector is designed to accommodate up to 7 gauge power wire. Connect this to vehicles positive battery terminal . We recommend that you "PowerFlow" and fuse (30 amp max) your MS-275/MPS-2240. See page 9.

13. REMOTE TURN-ON

Connect the automatic antenna lead or "remote" switched 12V DC lead from CD player (or radio) to this terminal. This connection allows the MS-275/MPS-2240 to be turned ON and OFF by the Volume-ON/OFF control on your head unit.

AMPLIFER LOCATION

The MS-275/MPS-2240has been designed to dissipate heat more efficiently than any other amplifier manufactured today. However, prolonged operation at high volumes or extremely low impedances without the aid of a FAN SHROUD can cause the unit to overheat and protect itself. Regardless of where you decide to mount the MS-275/MPS-2240 make sure that there is at least a 2-inch clearance above and around the amplifier.

The amplifier may be mounted either upright (Figure 1) or horizontally (Figure 2), but if possible NEVER upside down (Figure 3) -a position which causes the rising heat to "feed-back" into the amplifier causing a premature system shut down.

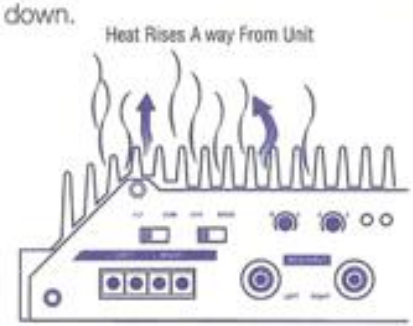

Figure 1

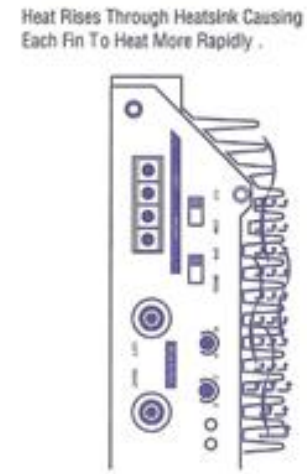

Figure 2

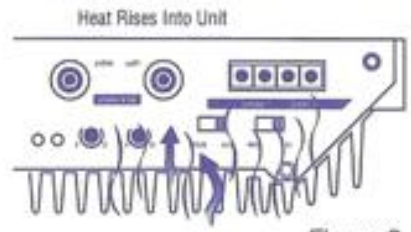

Figure 3

The MS-275/MPS-2240should be protected from exposure to moisture and it is best to mount the amplifier on:

1. The floor of the trunk
2. The side of the sub-woofer enclosure.
3. Under the seat.

Place amplifier in the position that you wish to use and check for clearances around the amplifier.

AMPLIFER MOUNTING

Mounting considerations: Is there enough space for the signal input plugs? Will the speaker and power cables be able to enter the terminal connectors straight? Will your mounting position allow easy viewing of indicator LED's and amplifier controls?

1. Use the MS-275/MPS-2240as the template. Mark the mounting surface with a felt pen or pencil. (Placing masking tape on the surface first will make these marks more visible).
2. Drill 1/8 inch pilot holes.
3. Mount the amplifier with the four (4) #8 by 11/4 inch panhead phillips screws provided.

The optimum mounting configuration is shown below in Figure 4. This mount allows the heat sink fins to act as a chimney thus keeping the amplifier cool over longer periods on time.

Do not drill any holes while using the amplifier as a template. It is very easy to damage the amplifier's powder coated surface in this manner.

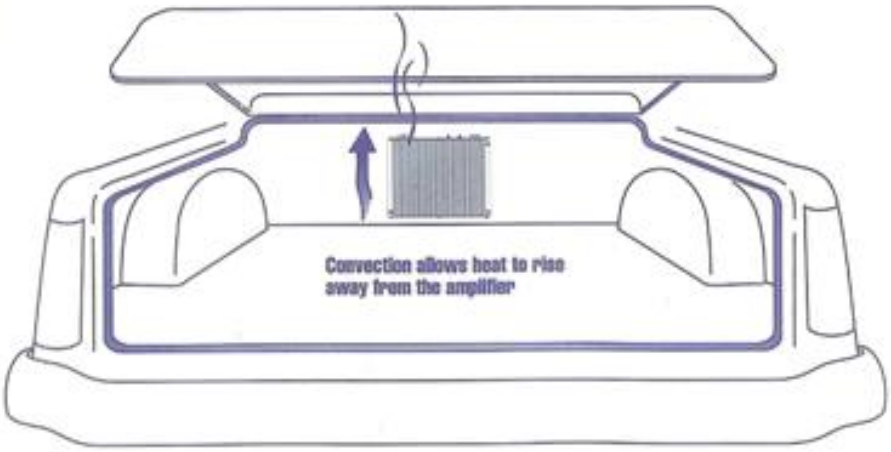

Figure 4 - Trunk Mount

ELECTRICAL INSTALLATION

NOTE: DISCONNECT BATTERY GROUND BEFORE INSTALLATION

1. Always use the largest gauge power/ground cable possible. The MS-275/MPS-2240 accepts up to 7 gauge wire (PHOENIX GOLD model number PS7R RED or PS7B BLACK).

2. Always place a fuse or circuit breaker no more than 18 inches from the battery. This protection is only for the vehicle, not the amp and should be no greater than 30 amps per amplifier. (See Figure 5)

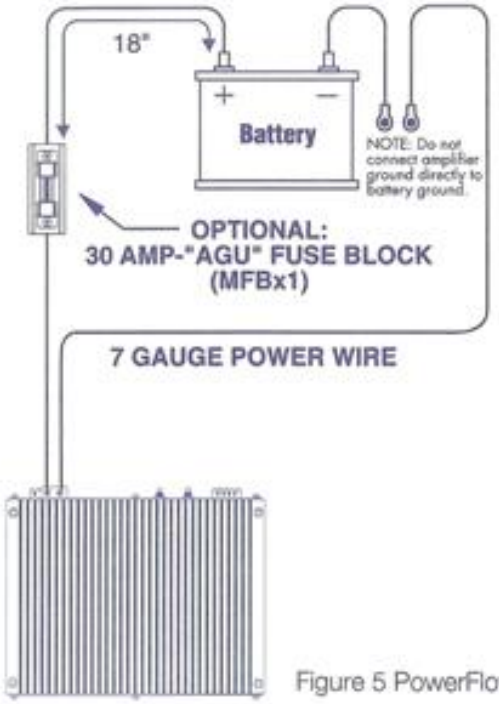

Figure 5 PowerFlow System

3. Always use the largest gauge speaker wire possible. The MS-275/MPS-2240 speaker terminal will accept up to 10 gauge cable. Utilizing the largest gauge wire will give you the highest "damping factor" possible, and thereby the tightest, most accurate bass.

4. After stripping the wires approximately 3/8 of an inch tin the very tip of each of the wires (See Figure 6). **This is VERY IMPORTANT!** If you tin the entire wire, it is possible to have a poor connection. This connection will result in high resistance; causing excessive heat which could **MELT** the connector and void the "limited" warranty.

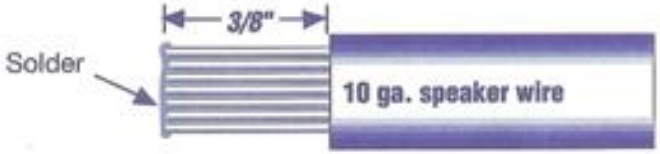

Figure 6 - Wire Stripping

5. Make sure that you run your audio cables AWAY from your power wires. This will help reduce any noise caused by the power wire radiating into the audio cables.

For audio connections, we STRONGLY recommend using high-quality audio interconnects like our STS (Super-TRIPLE-Shielded) or Compact STS cables. The Triple-Shielded cables are the ultimate in sound quality and for eliminating unwanted "radiated noise" from your system.

6 . If the "green" LED is ON the amplifier is "ON". If the "yellow" LED is ON the amplifier has "thermaled" meaning that the heatsink has reached 200°F and the amplifier has protected itself. The "red" LED will only light if the amp reaches full power at 1 ohm or less.

Make sure that all speakers are not shorted. Having a shorted output will not damage your PHOENIX GOLD MS-275/MPS-2240, but it will cause the protection circuitry to engage. This situation will be apparent when observing the three LED's on the front panel. The green LED will flash on for a second and then the red LED will stay lit. **Note**: This may recycle several times.

With the extreme flexibility of the PHOENIX GOLD MS-275/MPS-2240, we highly recommend that you carefully design the entire system BEFORE its installation. The following system diagrams should be used as ideas towards designing a truly awesome car audio system. Remember that THIS amplifier likes to be driven hard. Whenever possible ALWAYS choose the TRI-LINEAR mode (i.e.,stereo & bridged mono simultaneously). Passive crossover networks must be utilized in order to protect drivers. The following Crossover Slope charts are for your reference. When passive components (capacitors and inductors) are used in multiple speaker systems, the crossover's impedance AND the speaker system combinations MUST be considered especially when determining the amplifier loading. These system diagrams do not take into account crossover component values for the system you have chosen, since those values will be determined by the frequency you select for your crossover point and the impedance of the speakers at the crossover point selected for your system. 12dB per octave crossovers are good, but tend to create sonic problems if not utilized correctly. A 12dB per octave crossover (an inductor and capacitor for each speaker) forms a series resonant circuit to ground whose impedance at that resonance frequency is determined by the speakers DYNAMIC impedance. If the speaker, for whatever reason, becomes "open" or disconnected the crossover input impedance is theoretically zero (0). In other words, a direct SHORT.

Fortunately, PHOENIX GOLD amplifiers are designed to withstand this type of treatment. Generally, most amplifiers DO NOT like to see this condition. We recommend 6 dB or 18 dB per octave type crossovers, especially in automobiles. These crossover slopes are "In-Phase" and tend to sound better.

CROSSOVER SLOPES- TABLE OF COMPONENT VALUES

FREQUENCY HERTZ	SPEAKER IMPEDANCE					
	2 Ohm		4 Ohm		8 Ohm	
	L1	C1	L1	C1	L1	C1
80	4.1 mH	1000 uF	8.2 mH	500 uF	16 mH	250 uF
100	3.1 mH	800 uF	6.2 mH	400 uF	12 mH	200 uF
130	2.4 mH	600 uF	4.7 mH	300 uF	10 mH	150 uF
200	1.6 mH	400 uF	3.3 mH	200 uF	6.8 mH	100 uF
260	1.2 mH	300 uF	2.4 mH	150 uF	4.7 mH	75 uF
400	.8 mH	200 uF	1.6 mH	100 uF	3.3 mH	50 uF
600	.5 mH	136 uF	1.0 mH	68 uF	2.0 mH	33 uF
800	.41 mH	100 uF	.82 mH	50 uF	1.6 mH	25 uF
1000	.31 mH	78 uF	.62 mH	38 uF	1.2 mH	20 uF
1200	.25 mH	66 uF	.51 mH	33 uF	1.0 mH	16 uF
1800	.16 mH	44 uF	.33 mH	22 uF	.68 mH	10 uF
4000	80 uH	20 uF	.16 mH	10 uF	.33 mH	5 uF
6000	51 uH	14 uF	.10 mH	6.8 uF	.29 mH	3.3 uF
9000	34 uH	9.4 uF	68 uH	4.7 uF	.15 mH	2.2 uF
12000	25 uH	6.6 uF	51 uH	3.3 uF	.10 mH	1.6 uF

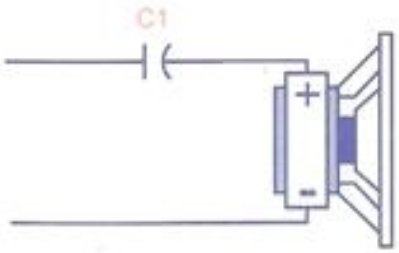

6 dB per Octave High-Pass filter

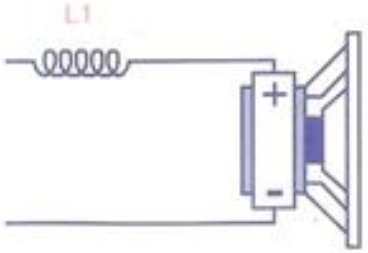

6 dB per Octave Low-Pass filter

CROSSOVER SLOPES- TABLE OF COMPONENT VALUES

FREQUENCY HERTZ	SPEAKER IMPEDANCE					
	2 Ohm		4 Ohm		8 Ohm	
	L1	C1	L1	C1	L1	C1
80	5.5 mH	680 uF	11 mH	330 uF	22 mH	180 uF
100	4.7 mH	560 uF	9.1 mH	270 uF	18 mH	150 uF
130	3.3 mH	400 uF	6.8 mH	200 uF	15 mH	100 uF
200	2.2 mH	300 uF	4.7 mH	150 uF	9.1 mH	75 uF
260	1.8 mH	200 uF	3.6 mH	100 uF	6.8 mH	50 uF
400	1.1 mH	150 uF	2.2 mH	68 uF	4.7 mH	33 uF
600	.75 mH	100 uF	1.5 mH	47 uF	3.0 mH	27 uF
800	.50 mH	68 uF	1.0 mH	33 uF	2.0 mH	15 uF
1000	.47 mH	50 uF	.91 mH	27 uF	1.8 mH	13 uF
1200	.33 mH	44 uF	.75 mH	22 uF	1.5 mH	11 uF
1800	.27 mH	30 uF	.50 mH	15 uF	1.0 mH	6.8 uF
4000	.10 mH	15 uF	.22 mH	6.8 uF	.47 mH	3.3 uF
6000	75 uH	10 uF	.15 mH	4.7 uF	.33 mH	2.2 uF
9000	50 uH	6.8 uF	.10 mH	3.3 uF	.23 mH	1.5 uF
12000	39 uH	4.7 uF	75 uH	2.2 uF	.15 mH	1.0 uF

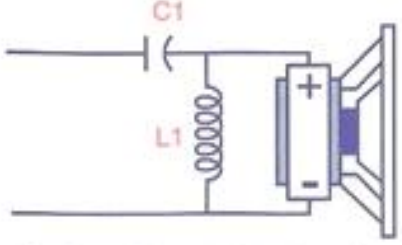

12 dB per Octave High-Pass filter

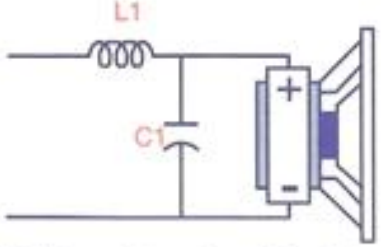

12 dB per Octave Low-Pass filter

CROSSOVER SLOPES- TABLE OF COMPONENT VALUES

FREQUENCY HERTZ	SPEAKER IMPEDANCE					
	4 Ohm			8 Ohm		
	C1	L1	C2	C1	L1	C1
80	330 uF	6.0 mH	1000 uF	160 uF	12 mH	500 uF
100	270 uF	4.7 mH	800 uF	150 uF	10 mH	400 uF
130	200 uF	3.3 mH	600 uF	100 uF	7.5 mH	300 uF
200	150 uF	2.2 mH	400 uF	68 uF	5.4 mH	200 uF
260	100 uF	1.8 mH	300 uF	50 uF	3.3 mH	150 uF
400	68 uF	1.1 mH	200 uF	33 uF	2.4 mH	100 uF
600	47 uF	.80 mH	130 uF	21 uF	1.6 mH	68 uF
800	33 uF	.60 mH	100 uF	16 uF	1.2 mH	50 uF
1000	27 uF	.47 mH	75 uF	13 uF	.90 mH	39 uF
1200	22 uF	.39 mH	68 uF	11 uF	.80 mH	33 uF
1800	15 uF	.27 mH	47 uF	7.5 uF	.50 mH	22 uF
2000	13 uF	.24 mH	40 uF	6.8 uF	.47 mH	20 uF
3000	8.8 uF	.16 mH	27 uF	4.7 uF	.33 mH	14 uF
4000	6.8 uF	.12 mH	20 uF	3.3 uF	.24 mH	10 uF
6000	4.7 uF	82 uH	13 uF	2.2 uF	.21 mH	6.8 uF
8000	3.3 uF	60 uH	10 uF	1.5 uF	.12 mH	5.0 uF
10000	2.7 uF	47 uH	8.2 uF	1.3 uF	.10 mH	3.9 uF
12000	2.2 uF	38 uH	6.8 uF	1.1 uF	82 uH	3.3 uF

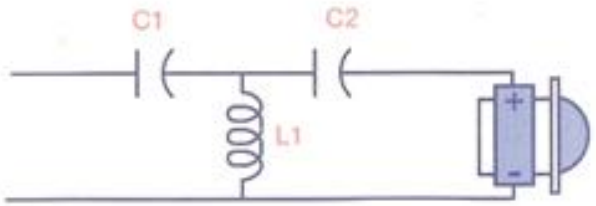

18 dB per Octave High-Pass filter

PHOENIX GOLD SYSTEM 1

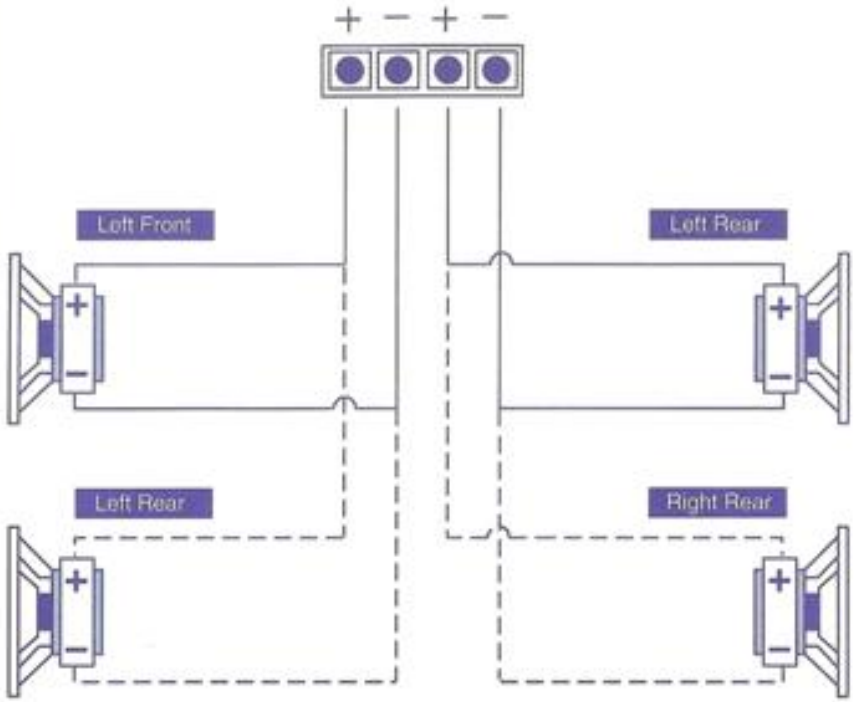

Stereo output into 2 (or 4) speakers.

PHOENIX GOLD SYSTEM 2

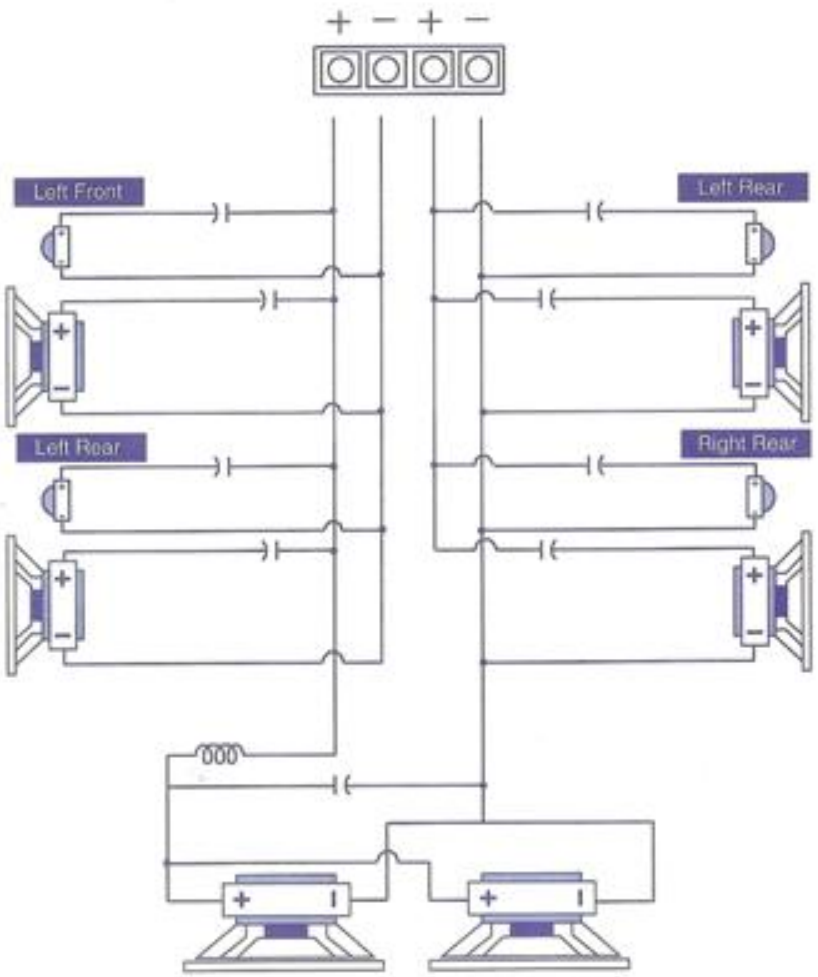

Front and rear speakers are in parallel with 6dB per octave passive crossovers subwoofer connected across the bridged output of MS-275/MPS-2240 amp with 12dB per octave passive crossover.

PHOENIX GOLD SYSTEM 3

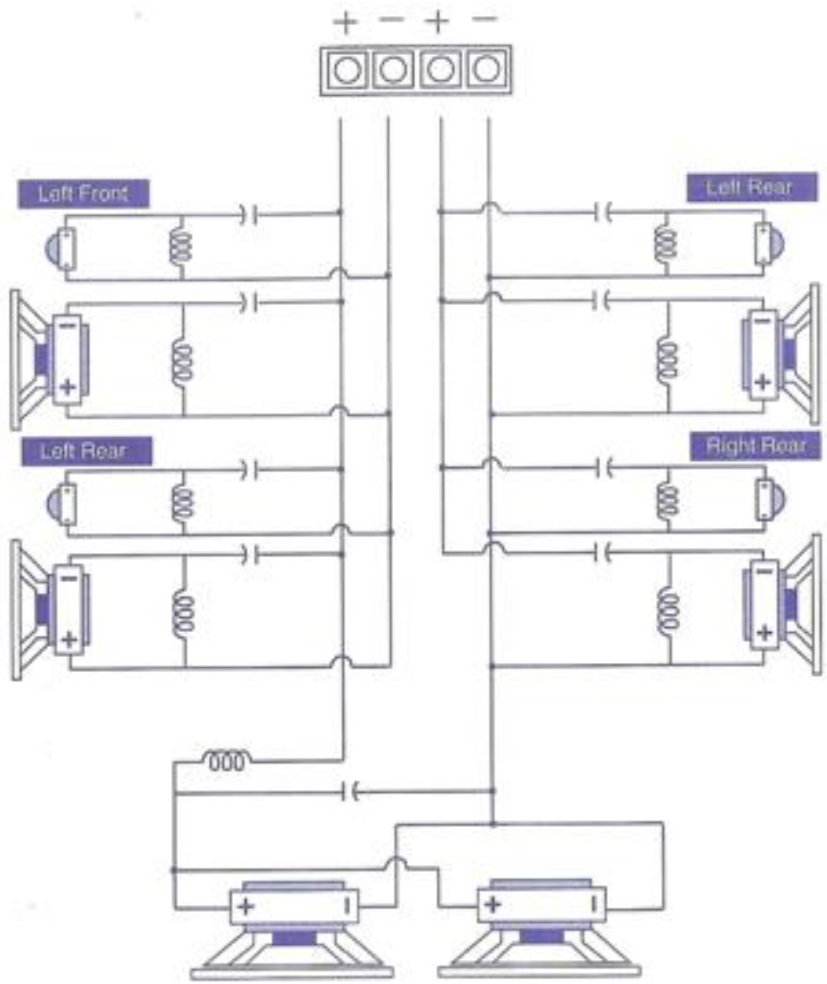

Front and rear speakers are in parallel with 12dB per octave passive crossovers and subwoofer connected across the bridged output of MS-275 MPS-2240 amplifier with 12dB per octave passive crossover. **NOTE:** Midrange is " out-of-phase" to the woofer and tweeter so that the entire speaker system will be acoustically "in-phase". This is very typical of 3-way 12 dB per octave networks.

PHOENIX GOLD SYSTEM 4

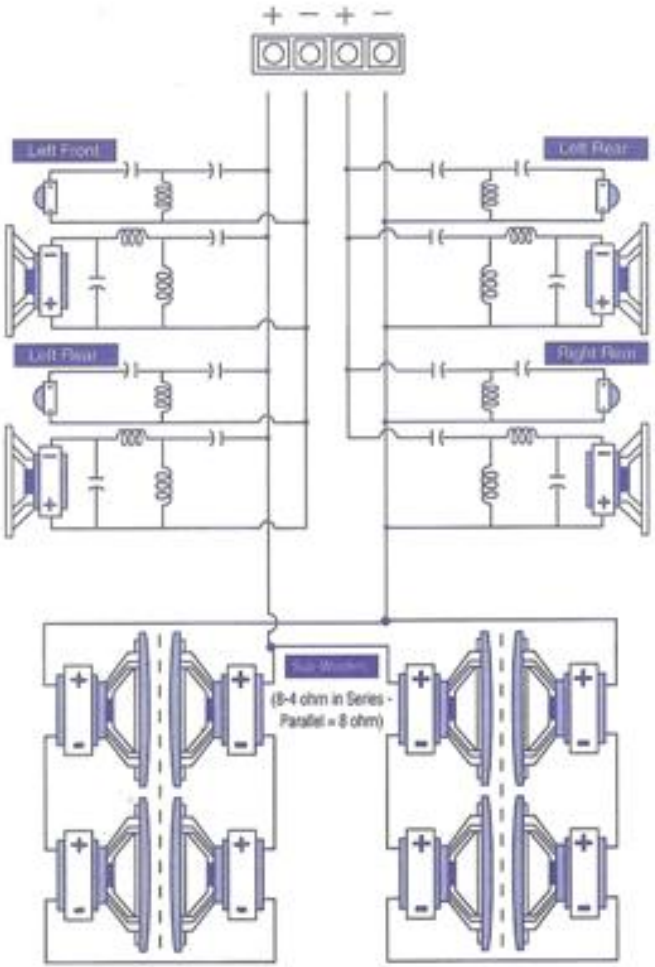

Tri-Linear Output™ - Front and rear speakers are in parallel with 12dB per octave passive crossovers, 12 dB bandpass passive crossovers and 18 db per octave high-pass tweeter crossover. Subwoofer connected across the bridged output of MS-275/MPS-2240 amplifier with 12dB per octave low-pass crossover. NOTE: The 8 woofers are connected series parallel with outside woofers out of phase to inside woofers. This is an "Isobaric" 7th order enclosure. Therefore, NO passive crossover is needed as a 7th order box rolls the high frequency off at 36 db per octave.

PHOENIX GOLD SYSTEM 5

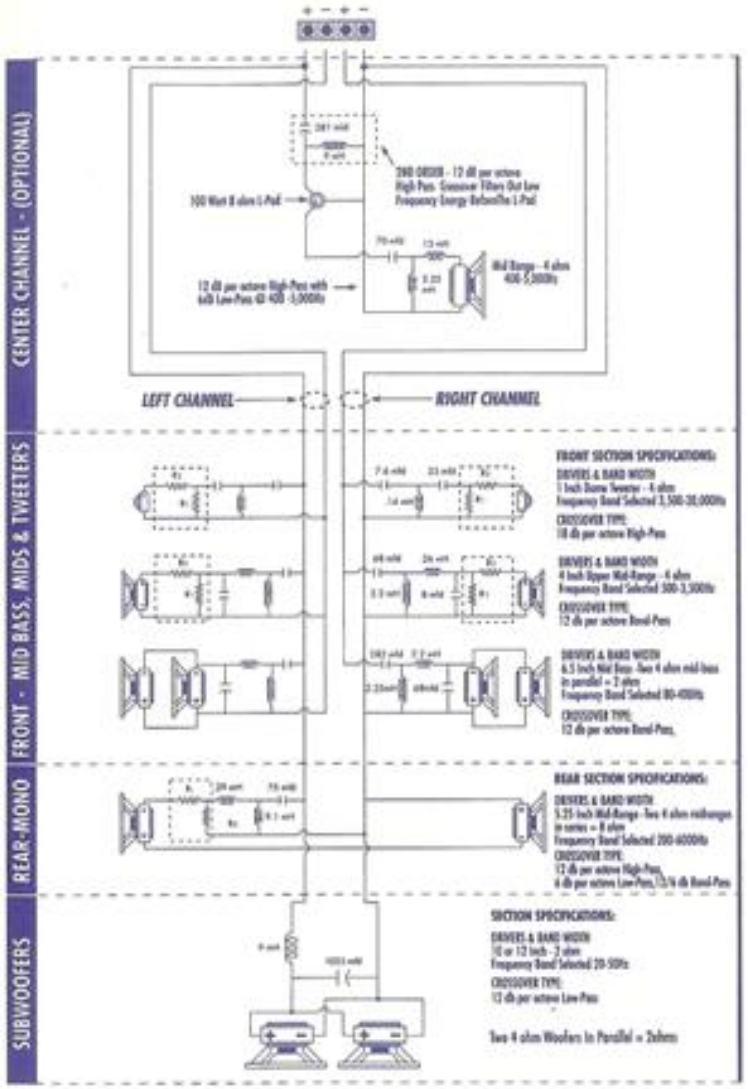

This system utilizes 4 mid-bass drivers to create the illusion that bass is coming from the front of the vehicle-not the rear ! Also note that the rear channel is MONO ! And check out the optional center channel. This is a IASCA (International Auto Sound Challenge) type system. When your going for best sound quality, use this system!

AMPLIFIER ADJUSTMENTS:

Before doing any adjustments:

A Make sure the "STR/BRDG" switch is in the "STR" position. Switch the "STR/BRDG" into "BRDG" ONLY when you are utilizing the amplifier for bridged mono use into subwoofers or as a dedicated left or right channel amplifier. (See Figure 7)

Figure 7 - Output Switch

The MS-275/MPS-2240 has both an input sensitivity adjustment and a Bass EQ adjustment. Caution should be taken to adjust these properly as they affect each other.

1. Start both adjustments at "0" or at minimum, a counter-clockwise setting for Bass EQ and Gain controls . Minimum gain is 2V input sensitivity (it takes 2 volts to drive the amp into clipping). (See Figure 8).

Figure 8 - Bass & Gain Control

2. Adjust the volume control on your head unit (C/D, Cassette, etc.) to approximately 3 o'clock or 3/4 volume setting. (See Figure 9)

Figure 9 - Volume Control

3. Turn the level setting adjustment on the MS-275/MPS-2240 clock-wise (i.e: to the left) until you hear the amplifier distort. The MS-275/MPS-2240 "clips" very softly so this can sometimes be a difficult adjustment. Please listen carefully! (See Figure 10)

Figure 10 - Gain Control

4. If, after adjusting the "input" level, the bass sound quality is to your liking it would be best to not adjust the "Bass EQ" level control. Remember that adding any bass boost into the system either through an external equalizer OR the built-in one provided with the MS-275/MPS-2240 can cause the amplifier to :

   A. Distort more often, or...

   B. Overheat at a much more rapid rate than is normal.

5. If you desire more BASS output, adjust the "BASS EQ" level "clockwise". The adjustment range is from "0" to "+12 dB". We recommend using as little Bass EQ as possible. Remember boosting +12 dB at 45 Hz requires the amplifier to work 16 times harder! (See Figure 11)

Figure 11 - Bass Control

IMPORTANT NOTE:
If you need to boost the "BASS EQ" to the maximum level +12 dB to obtain the desired bass output-SOMETHING IS VERY WRONG. Check the design notes for your subwoofer enclosure. More than likely the woofer and the enclosure are NOT working together correctly.

MASTER / SLAVE CONNECTION

In single amplifier installations, the "master/slave" connection is never utilized. This connection is only used when two or more PHOENIX GOLD amplifiers are used in the same vehicle. The "master" and "slave" interfacing of power supplies is an exclusive feature to PHOENIX GOLD, and in multi-amp systems it can greatly reduce RFI-HETERODYNE noise. RFI-HETERODYNE noise is only present when more than one amplifier is present (or any other device with DC to DC switching power supplies). The noise has a unique "whooshing" or "birdy" sound that you have probably heard at very low volume levels and/or on AM. You may have heard this type of noise in a number of otherwise outstanding car audio systems and until now it has been impossible to solve!

CAUTION • CAUTION • CAUTION • CAUTION • CAUTION

If you plan to use this connection, please follow these instructions carefully. Before making a change to any amplifiers "master/slave" configuration, power MUST be disconnected to ALL amplifiers. Failure to do so may damage the amplifier(s), and will void your warranty.

1. Decide which amplifier is to be the "Master" and which is to be the "Slave". Unscrew the bottom plate of the master amplifier using a #1 phillips screwdriver and a 7/64" allen wrench. Note: If your amplifiers were purchased at different times, we recommend using the newest amplifier (with the highest serial number) as the "Master".
2. Inside the amplifier is a PCB mount slide switch next to the master/slave jacks. Switch the amplifier into the "Master" position by moving the switch away from the blue dot. All amplifiers are shipped in the "Slave" position. (See Figure 12)

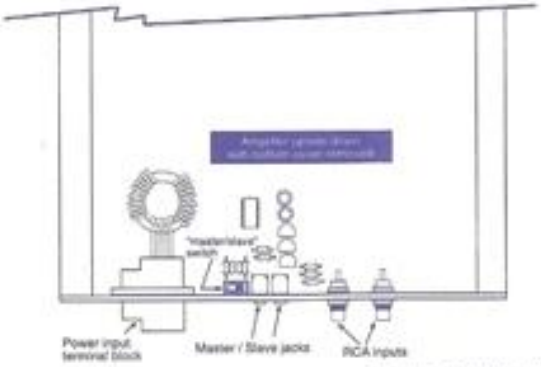

Figure 12 Master/Slave Switch

3. Measure the distance from the first amplifier's "master" output jack to the next amplifier's "slave" input jack (See figure 9). If you use more than 2 PHOENIX GOLD Amps, connect them "daisy-chain" style. The Master / Slave inputs are paralleled internally, so this makes it easy. There is no wrong way to connect master/slave from one amp to another. (See figure 13)

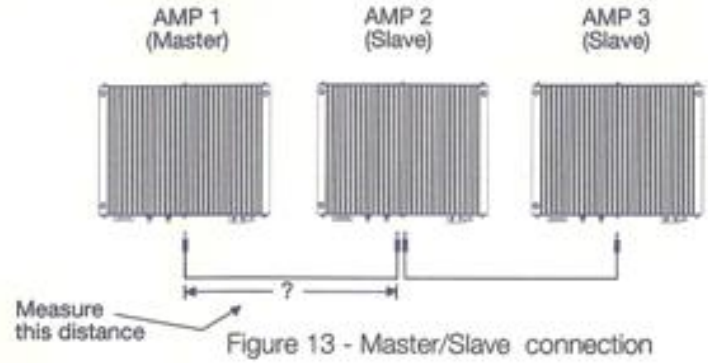

Figure 13 - Master/Slave connection

4. Using a 3.5mm mini-phone plug (NOT SUPPLIED- see figure 10) for both the output and input, SOLDER a small gauge shielded cable to both mini-phone plugs. Make sure that the cable is at least 4 inches longer than the measured distance. This will allow for running the cable with gentle bends to each amplifier. (See figure 14)

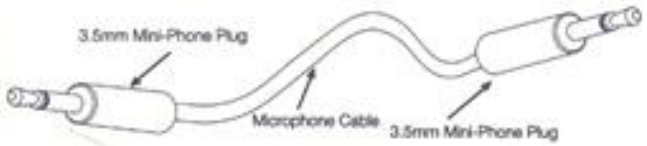

Figure 14 Master/Slave Cable

5. Plug the 3.5mm mini-phone plugs in. The amplifier power supplies are now synchronized.

The installation is now complete. Enjoy!

POSTSCRIPT: If you experience ANY problems do not hesitate to contact us at 503-288-2008. We are ready to help.